Asher Pull Down Bridge Kitchen Faucet

studiodesign COLLECTION

Features

- Fits 3 hole sinks
- ABS 2 function sprayhead
- Ceramic disc cartridge
- Metal lever handle
- 1.75 gpm (6.6 L/min) max

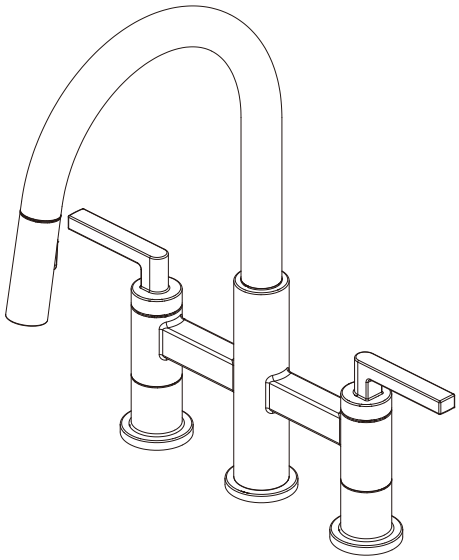

MODEL#	Finish
101137479	Chrome
101137438	Brushed Gold
101137487	Matte Black

Approvals

NSF/ANSI/CAN 372
NSF/ANSI/CAN 61-9 · Q≤1
UPC GREEN Water Efficiency

Product Diagrams

Front

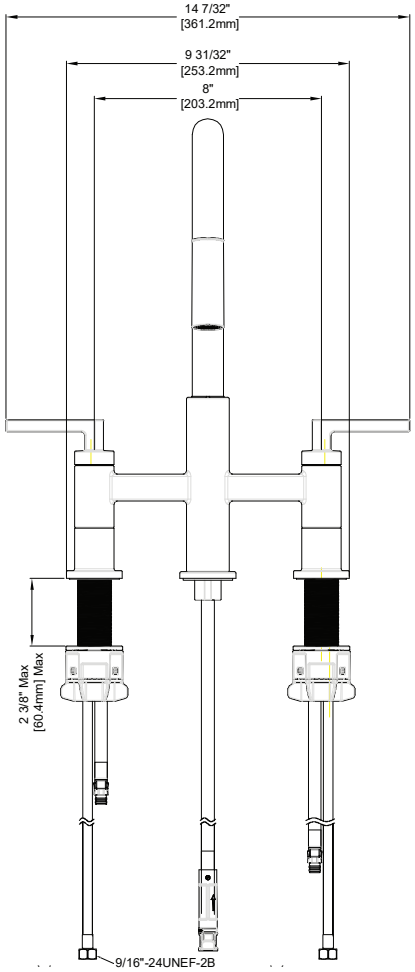

Side

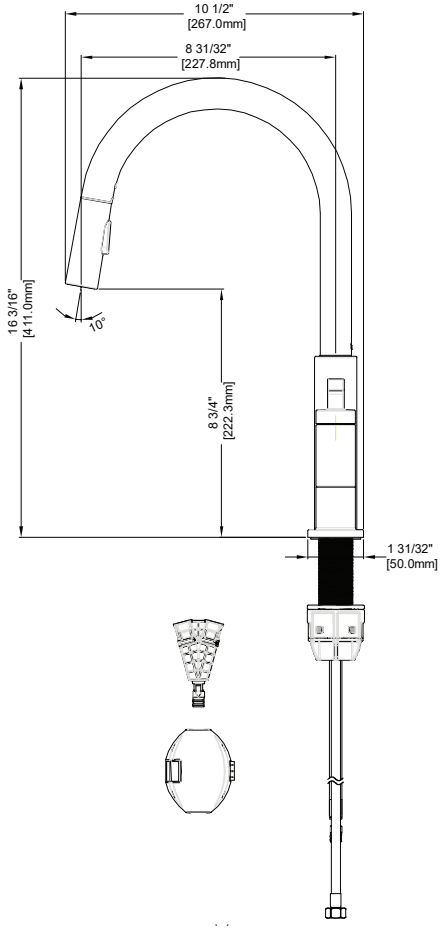

Please call our toll-free Technical Support line at 877-580-5682 for additional assistance or missing parts.

Asher Pull Down Bridge Kitchen Faucet

Replacement Parts List

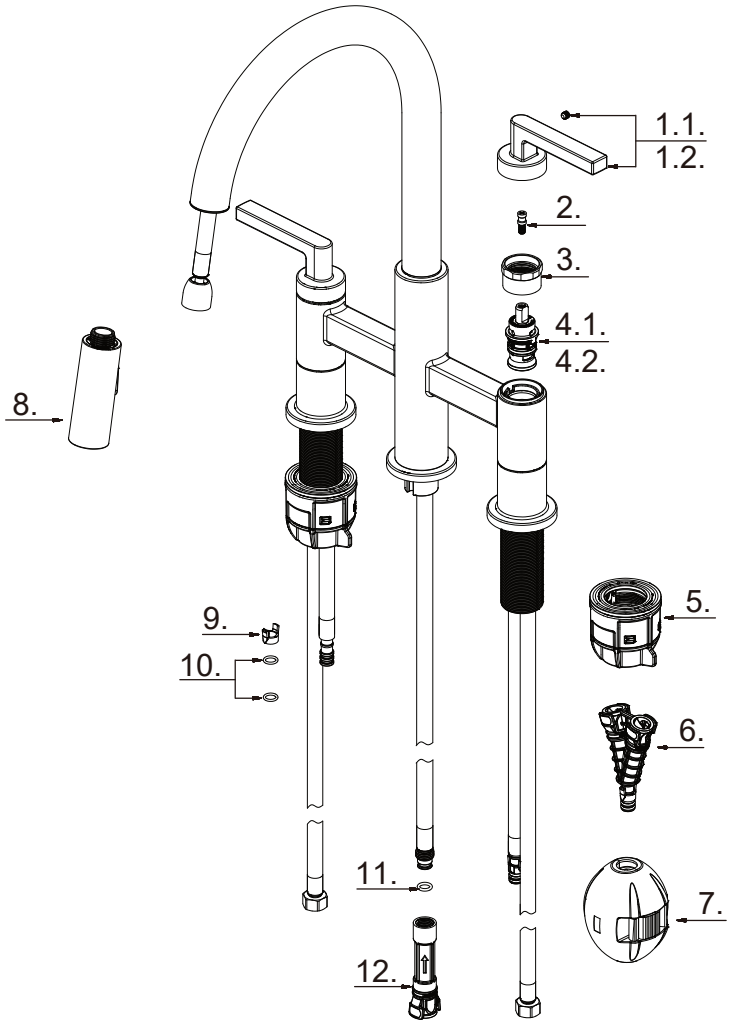

Part	Part #	Description
1.1	RP13938*	Metal Handle Assembly - Cold
1.2	RP13939*	Metal Handle Assembly - Hot
2	RP70145	Connector
3	RP70903	Retainer Nut
4.1	RP20068	Ceramic Disc Cartridge - Cold
4.2	RP20067	Ceramic Disc Cartridge - Hot
5	RP56161	Quick install nut
6	RP70867	Quick connect assembly
7	RP70902	Weight
8	RP38642*	Spray head
9	RP70421	Block
10	RP60002	O-Ring
11	RP60089	O-Ring
12	RP70697	Quick connect assembly

* Represent for 01:CP / 4408:BG / 7001:MB